Trials@uspto.gov
571-272-7822

Paper 77
Entered: December 27, 2018

UNITED STATES PATENT AND TRADEMARK OFFICE

BEFORE THE PATENT TRIAL AND APPEAL BOARD

APPLE INC.,
Petitioner,

v.

CALIFORNIA INSTITUTE OF TECHNOLOGY,
Patent Owner.

Case IPR2017-00210
Patent 7,116,710 B1

Before KEN B. BARRETT, TREVOR M. JEFFERSON, and JOHN A. HUDALLA, *Administrative Patent Judges*.

JEFFERSON, *Administrative Patent Judge*.

FINAL WRITTEN DECISION
35 U.S.C. § 318(a) and 37 C.F.R. § 42.73

I. INTRODUCTION

Petitioner, Apple, Inc. ("Apple"), filed a Petition (Paper 5, "Pet.") requesting an *inter partes* review of claims 1–8, 10–17, and 19–33 of U.S. Patent No. 7,116,710 B1 (Ex. 1001, "the '710 patent") pursuant to 35 U.S.C. §§ 311–319. Patent Owner, California Institute of Technology ("Caltech"), filed a Preliminary Response (Paper 17, "Prelim. Resp.") to the Petition.

We instituted an *inter partes* review on claims 1–8, 11–17, 19–22, and 24–33 of the '710 patent on certain grounds of unpatentability presented. (Paper 18, "Inst. Dec."). Caltech filed a Patent Owner Response (Paper 35, "PO Resp."), and Apple filed a Petitioner Reply (Paper 46, "Pet. Reply"). Caltech also filed a Sur-Reply (Paper 62, "PO Sur-Reply"), as was authorized by our Order of March 2, 2018 (Paper 55). An oral hearing was held on April 19, 2018, and a transcript of the hearing is included in the record. Paper 72 ("Tr.").

Apple filed a Declaration of James A. Davis, Ph.D. (Ex. 1006) with its Petition and a Declaration of Brendan Frey, Ph.D. (Ex. 1065) with its Reply. Caltech filed Declarations of Dr. Dariush Divsalar (Ex. 2031) and Dr. Michael Mitzenmacher (Ex. 2004) with its Response.

As authorized in our Order of February 10, 2018 (Paper 48), Patent Owner filed a motion for sanctions related to Petitioner's cross-examination of Patent Owner's witnesses, Dr. Mitzenmacher (Paper 50) and Dr. Divsalar, and Petitioner filed an opposition (Paper 52).

In light of the U.S. Supreme Court's decision in *SAS Institute, Inc. v. Iancu*, 138 S. Ct. 1348 (2018), we modified our Institution Decision to institute on all of the challenged claims and all of the grounds. Paper 69. Subsequently, the parties filed a joint motion to limit the Petitions to the

claims and grounds that were originally instituted. Paper 71. We granted their motion. Paper 73. As a result, the remaining instituted claims and grounds are the same as they had been at the time of the Institution Decision. *See id.* at 3.

The one-year period normally available to issue a Final Written Decision was extended under 37 C.F.R. § 42.100(c). Papers 74, 75, 1–2.

We have jurisdiction under 35 U.S.C. § 6. This decision is a Final Written Decision under 35 U.S.C. § 318(a) as to the patentability of claims 1–8, 11–17, 19–22, and 24–33 of the ’710 patent. For the reasons discussed below, Petitioner has not demonstrated by a preponderance of the evidence that claims that claims 1–8, 11–17, 19–22, and 24–33 are unpatentable.

A. Related Proceedings

The parties indicate that the ’710 patent was involved in the following active case, *Cal. Inst. of Tech. v. Broadcom Ltd.*, No. 2:16-cv-03714 (C.D. Cal. filed May 26, 2016), and in concluded cases, *Cal. Inst. of Tech. v. Hughes Commc’ns*, *Inc*., No. 2:15-cv-01108 (C.D. Cal. filed Feb. 17, 2015); and *Cal. Inst. of Tech. v. Hughes Commc’ns, Inc*., 2:13-cv-07245 (C.D. Cal. filed Oct. 1, 2013). Pet. 3, Paper 8, 2–3.

The parties also identify co-pending case IPR2017-00219, in which Apple filed a petition for *inter partes* review of the ’710 patent. Pet. 3; Paper 8, 2–3. *Inter partes* review of the ’710 patent was previously considered and denied in *Hughes Network Sys., LLC v. Cal. Inst. of Tech*., IPR2015-00067 (PTAB April 27, 2015) (Paper 18) (“IPR2015-00067”) and *Hughes Network Sys., LLC v. Cal. Inst. of Tech.*, IPR2015-00068 (PTAB

April 27, 2015) ("IPR2015-00068"). Finally, patents related to the '710 patent were challenged in IPR2015-00059, IPR2015-00060, IPR2015-00061, and IPR2015-00081. Pet. 3.

B. The '710 Patent

The '710 patent describes the serial concatenation of interleaved convolutional codes forming turbo-like codes. Ex. 1001, Title. It explains some of the prior art with reference to its Fig. 1, reproduced below.

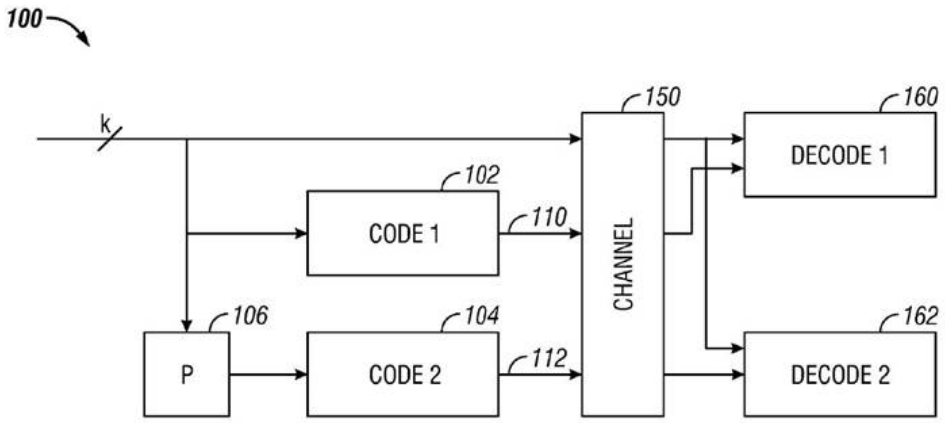

FIG. 1
(Prior Art)

Figure 1 is a schematic diagram of a prior "turbo code" system. *Id.* at 2:14–15. The '710 patent specification describes Figure 1 as follows:

> A standard turbo coder 100 is shown in FIG. 1. A block of k information bits is input directly to a first coder 102. A k bit interleaver 106 also receives the k bits and interleaves them prior to applying them to a second coder 104. The second coder produces an output that has more bits than its input, that is, it is a coder with rate that is less than 1. The coders 102,104 are typically recursive convolutional coders.
>
> Three different items are sent over the channel 150: the original k bits, first encoded bits 110, and second encoded bits 112. At the decoding end, two decoders are used: a first

> constituent decoder 160 and a second constituent decoder 162. Each receives both the original k bits, and one of the encoded portions 110, 112. Each decoder sends likelihood estimates of the decoded bits to the other decoders. The estimates are used to decode the uncoded information bits as corrupted by the noisy channel.

Id. at 1:38–53(emphasis omitted).

A coder 200, according to a first embodiment of the invention, is described with respect to Figure 2, reproduced below.

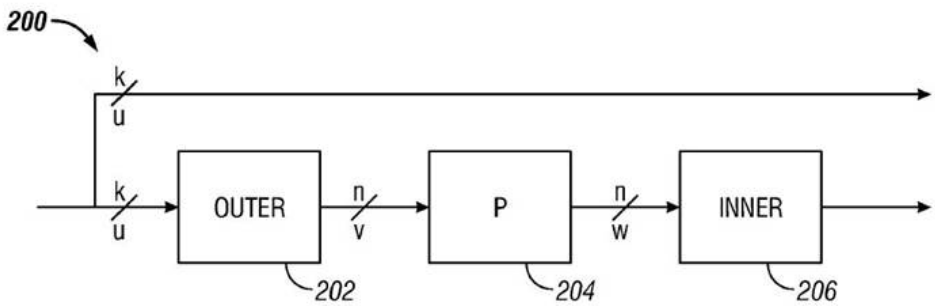

FIG. 2

Figure 2 of the '710 patent is a schematic diagram of coder 200. *Id*. at 2:16–17.

The specification states that "coder 200 may include an outer coder 202, an interleaver 204, and inner coder 206." *Id*. at 2:34–35. It further states as follows:

> The outer coder 202 receives uncoded data. The data may be partitioned into blocks of fixed size, say k bits. The outer coder may be an (n,k) binary linear block coder, where n>k. The coder accepts as input a block u of k data bits and produces an output block v of n data bits. The mathematical relationship between u and v is $v=T_0u$, where T_0 is an $n\times k$ matrix, and the rate[1] of the coder is k/n.

[1] The "rate" of an encoder refers to the ratio of the number of input bits to the number of resulting encoded output bits related to those input bits. *See* Pet. 9.

> The rate of the coder may be irregular, that is, the value of T_0 is not constant, and may differ for sub-blocks of bits in the data block. In an embodiment, the outer coder 202 is a repeater that repeats the k bits in a block a number of times q to produce a block with n bits, where n=qk. Since the repeater has an irregular output, different bits in the block may be repeated a different number of times. For example, a fraction of the bits in the block may be repeated two times, a fraction of bits may be repeated three times, and the remainder of bits may be repeated four times. These fractions define a degree sequence, or degree profile, of the code.
>
> The inner coder 206 may be a linear rate-1 coder, which means that then-bit output block x can be written as $x=T_I w$, where T_I is a nonsingular $n \times n$ matrix. The inner coder 210 can have a rate that is close to 1, e.g., within 50%, more preferably 10% and perhaps even more preferably within 1% of 1.

Id. at 2:41–64 (emphasis omitted). Codes characterized by a regular repeat of message bits into a resulting codeword are referred to as "regular repeat," whereas codes characterized by irregular repeat of message bits into a resulting codeword are referred to as "irregular repeat." The second ("inner") encoder 206 performs an "accumulate" function. Thus, the two-step encoding process illustrated in Figure 2, including a first encoding ("outer encoding") followed by a second encoding ("inner encoding"), results in either a "regular repeat accumulate" ("RRA") code or an "irregular repeat accumulate ("IRA") code, depending upon whether the repetition in the first encoding is regular or irregular.

Figure 4 of the '710 patent, reproduced below, shows an alternative embodiment in which the first encoding is carried out by a low density generator matrix.

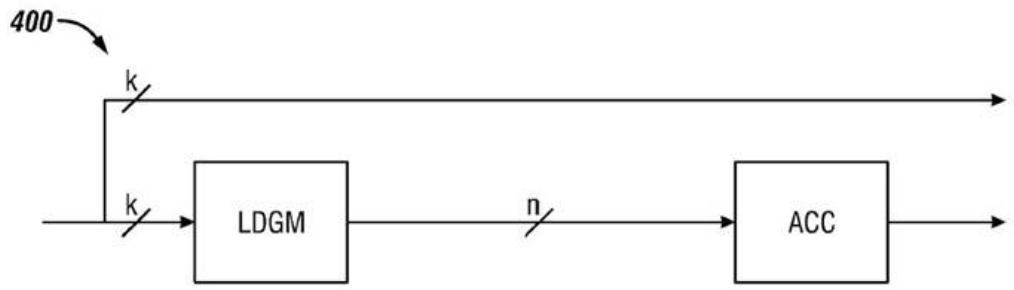

FIG. 4

Figure 4 of the '710 patent is a schematic of an irregular repeat and accumulate coder using a low density generator matrix (LDGM)[2] coder. *Id*. at 2:20–21, 3:24–25, 3:51–54. The LDGM coder "performs an irregular repeat of the k bits in the block, as shown in FIG. 4." *Id*. LDGM codes are a special class of low density parity check codes that allow for less encoding and decoding complexity. LDGM codes are systematic linear codes generated by a "sparse" generator matrix. No interleaver (as in the Figure 2 embodiment) is required in the Figure 4 embodiment because the LDGM provides scrambling otherwise provided by the interleaver.

C. Challenged Claims

Claims 1, 11, 15, and 25 of the '710 patent are independent. Claims 1 and 3 are illustrative of the claims at issue and are reproduced below:

1. A method of encoding a signal, comprising:

obtaining a block of data in the signal to be encoded;

partitioning said data block into a plurality of sub-blocks, each sub-block including a plurality of data elements;

[2] A "generator" matrix (typically referred to by "G") is used to create (generate) codewords. A parity check matrix (typically referred to by "H") is used to decode a received message.

> first encoding the data block to from a first encoded data block, said first encoding including repeating the data elements in different sub-blocks a different number of times;
>
> interleaving the repeated data elements in the first encoded data block; and
>
> second encoding said first encoded data block using an encoder that has a rate close to one.
>
> 3. The method of claim 1, wherein said first encoding is carried out by a first coder with a variable rate less than one, and said second encoding is carried out by a second coder with a rate substantially close to one.

Ex. 1001, 7:14–25, 7:28–31.

D. The Remaining Grounds of Unpatentability

The following grounds of unpatentability remain at issue in this case (Inst. Dec. 31; Paper 72, 2–3):

Reference(s)	Basis	Claims Challenged
Frey[3]	§ 102(a)	1 and 3
Frey and Divsalar[4]	§ 103(a)	1–8 and 11–14
Frey, Divsalar, and Luby97[5]	§ 103(a)	15–17, 19–22, and 24–33

[3] Brendan J. Frey and David J.C. MacKay, *Irregular Turbocodes*, PROCEEDINGS OF THE 37TH ALLERTON CONFERENCE ON COMMUNICATION, CONTROL, AND COMPUTING (1999) at 241–248 (Ex.1002, "Frey).
[4] Dariush Divsalar, et al., *Coding Theorems for "Turbo-Like" Codes*, PROCEEDINGS OF THE THIRTY-SIXTH ANNUAL ALLERTON CONFERENCE ON COMMUNICATION, CONTROL, AND COMPUTING, Sept. 23–25, 1998, at 201–209 (Ex. 1003, "Divsalar").
[5] Luby, M. et al., *Practical Loss-Resilient Codes*, PROCEEDINGS OF THE TWENTY-NINTH ANNUAL ACM SYMPOSIUM ON THEORY OF COMPUTING, May 4–6, 1997, at 150–159 (Ex. 1011, "Luby97").

II. ANALYSIS

A. Claim Interpretation

Because this *inter partes* review is based on a petition filed before November 13, 2018, we construe the claims by applying the broadest reasonable interpretation in light of the specification. 37 C.F.R. § 42.100(b) (2016); *see Cuozzo Speed Techs., LLC v. Lee*, 136 S. Ct. 2131, 2144–46 (2016). In applying a broadest reasonable construction, claim terms generally are given their ordinary and customary meaning, as would be understood by one of ordinary skill in the art in the context of the entire disclosure. *See In re Translogic Tech., Inc.*, 504 F.3d 1249, 1257 (Fed. Cir. 2007). Any special definition for a claim term must be set forth in the specification with reasonable clarity, deliberateness, and precision. *In re Paulsen*, 30 F.3d 1475, 1480 (Fed. Cir. 1994).

1. "close to one" and "rate" (claims 1 and 3)

Petitioner argues that the broadest reasonable construction of "close to one" as recited in claims 1 and 3 is "within 50% of one." Pet. 24. Petitioner argues that this is consistent with the '710 patent specification, which states that the inner code 210 of Figure 1, "can have a rate that is close to one, e.g., within 50%, more preferably 10% and perhaps even more preferably within 1% of 1." Pet. 24–25 (quoting Ex. 1001, 2:62–64 and citing Ex. 1006, ¶¶ 102–103).

Patent Owner argues that the term "close to one" does not need to need to be construed (PO Resp. 19), but argues that the "term 'rate' in the context of an encoder would be 'the ratio of the number of input bits to the number of output bits'" (*id*. at 18 (citing Ex. 2004 ¶¶ 59–60)). Citing the testimony of Mr. Mitzenmacher, Patent Owner argues that "there is no

dispute that 'rate' should be construed as 'the ratio of the number of input bits to the number of output bits.'" PO Resp. 19; *see* Ex. 2033, 43:18–44:7; Ex. 2004 ¶¶ 59–60. Further, Patent Owner argues that the '710 patent explains that the rate of the coder is the number of input bits divided by the number of output bits. PO Resp. 18; Ex. 1001, 2:44–47, 2:59–61.

We agree with the parties determining that "close to one" as recited in claims 1 and 3 is construed as "within 50% of one."

With respect to "rate," Petitioner does not challenge Patent Owner's argument, which is supported by the '710 specification. See Pet. Reply 5 (discussing rate). Accordingly, we agree that "rate" is construed as "the ratio of the number of input bits to the number of output bits."

B. Frey's Status as Prior Art

Petitioner contends Frey qualifies as a prior art printed publication under 35 U.S.C. § 102(a) relative to the May 18, 2000, filing date of the provisional application to which the '710 patent claims priority. Pet. 5–6; *see also* Ex. 1001, [60]. Specifically, Petitioner asserts that Frey was "published in the Proceedings of the 37th Allerton Conference on Communication, Control and Computing" and that the "conference proceedings were published on or before March 20, 2000." *Id.* at 25 (citing Ex. 1015 (showing stamps from the Cornell University Library and the table of contents for the conference) and Ex. 1006 ¶ 63).

Patent Owner contends that Petitioner has not established that Frey is prior art under 35 U.S.C. § 102(a). PO Resp. 13–17. Specifically, Patent Owner argues that Petitioner is bound by its assertion in the Petition that March 20, 2000, is the publication date for Frey. PO Resp. 15 (citing

Pet. 25). Patent Owner also argues that the invention of the ’710 patent was conceived prior to March 20, 2000, and reduced to practice with reasonable diligence. PO Resp. 14–17 (citing *Perfect Surgical Techniques, Inc. v. Olympus Am., Inc*., 841 F.3d 1004, 1007 (Fed. Cir. 2016)). Patent Owner cites testimony from Dr. Hue Jin, a co-inventor and various contemporaneous records in support of its attempt to antedate the alleged March 20, 2000, publication date for Frey.

With respect to conception, Patent Owner argues that the declaration of Dr. Jin (Ex. 2020) with corroborating exhibits supports prior conception of the invention and removes Frey as prior art. Dr. Jin is a co-inventor and provides testimony and supporting documents that Patent Owner contends show that by early March 2000 the inventors “had developed the Irregular Repeat Accumulate code of the ’710 patent, including an outer coder that could be generalized as a low-density generator matrix (LDGM), permitting elimination of an interleaver and focus on irregularity, and an inner coder comprising an accumulator.” PO Resp. 15–16 (citing Ex. 2020 ¶¶ 5–7; Ex. 2022; Ex. 2031 ¶¶ 13–15). Specifically, Patent Owner argues that in early March 2000, Dr. Jin created and ran simulations using files and code that reflected the structure identical to the IRA code of Figure 3 in the ’710 patent. PO Resp. 16 (Ex. 2020 ¶¶ 8–14). Moreover, Patent Owner avers that actual reduction to practice occurred on March 20, 2000, when a simulation ran using the irregular degree profile written on March 13, 2000. PO Resp. 16 (citing Ex. 2020 ¶¶ 8, 15–18). Patent Owner asserts that the inventors proceeded diligently to constructive reduction to practice on May 18, 2000, which is the filing date for the ’710 patent. PO Resp. 16–17; Ex. 1001, [22].

In reply, Petitioner attempts to show that Frey was published even earlier—February 2000—based on testimony "from former co-chairs of the conference at which Frey was presented" regarding the shipment of conference proceedings. Pet. Reply 17 (citing Exs. 1032–1034). Petitioner also argues that Patent Owner's evidence does not corroborate the alleged date conception or demonstrate sufficient diligence. *Id.* at 18–22. Patent Owner's conception date, Petitioner argues, relies improperly on uncorroborated testimony from a co-inventor where corroboration beyond the inventor is necessary to avoid self-serving testimony. Pet. Reply 18 (*Singh v. Burke*, 317 F.3d 1334, 1340–41 (Fed. Cir. 2003)). Petitioner also argues that Patent Owner's documents and testimony fail to support Patent Owner's dates because (1) Exhibit 2022 is an unwitnessed excerpt from an inventor's notebook that fails to show a key feature of the invention (Pet. Reply 19); (2) the parameter files and software files cited as part of the pre-March 20, 2000, activity are undated or uncertain, at best, as to the date the files or software were run or updated (*id*. at 19–20 (discussing Exhibits 2025, 2027, 2029 (undated parameter files) and Exhibits 2023, 2024, 2026, and 2028 (simulation software files)). *See also* Pet. Reply 20 n.5 (arguing that the inventor's testimony regarding parameter files is the sole support for the dates for those files and that such testimony is not consistent or reliable).

In its sur-reply, Patent Owner asserts that Petitioner's shifting publication date is improper as untimely and prejudicial. PO Sur-Reply 2.

1. Printed Publication Analysis

We look to the underlying facts to make a legal determination as to whether a reference is a printed publication. *Suffolk Techs., LLC v. AOL Inc.*, 752 F.3d 1358, 1364 (Fed. Cir. 2014). The determination of whether a

given reference qualifies as a prior art "printed publication" involves a case-by-case inquiry into the facts and circumstances surrounding its disclosure to members of the public. *In re Klopfenstein*, 380 F.3d 1345, 1350 (Fed. Cir. 2004). The key inquiry is whether the reference was made "sufficiently accessible to the public interested in the art" before the critical date. *In re Cronyn*, 890 F.2d 1158, 1160 (Fed. Cir. 1989); *In re Wyer*, 655 F.2d 221, 226 (CCPA 1981). "A given reference is 'publicly accessible' upon a satisfactory showing that such document has been disseminated or otherwise made available to the extent that persons interested and ordinarily skilled in the subject matter or art exercising reasonable diligence, can locate it." *Bruckelmyer v. Ground Heaters, Inc*., 445 F.3d 1374, 1378 (Fed. Cir. 2006) (citation omitted).

Petitioner has put forth date stamp evidence that a copy of the conference proceedings including Frey was at least received in the Cornell University Library by March 20, 2000. Ex. 1015, 16. Petitioner also put forth a declaration of Pamela Stansbury, an employee in the Original Cataloging Unit of the Cornell University Library, who testifies that, based upon her review of library records and her knowledge of standard operating procedures, Frey was "publicly available at the Cornell University Library as of March 20, 2000." Ex. 1031 ¶ 4; *see also* Paper 22, 5 (Petitioner's motion to submit supplemental information, which includes a description of Exhibit 1031); Paper 32 (granting Petitioner's motion to submit supplemental information). Patent Owner does not dispute that Frey was publicly available as of March 20, 2000. *See* PO Resp. 15. Based on Petitioner's evidence, we determine that Frey qualifies as a prior art printed publication as of March 20, 2000.

We need not consider Petitioner's purported evidence of an even earlier publication date (*see* Pet. Reply 17–18), because we determine below that Patent Owner's evidence is insufficient to antedate Frey's March 20, 2000, publication date.

2. Patent Owner's Attempt to Antedate Frey

We now consider Patent Owner's arguments attempting to antedate Frey by showing an earlier conception date and diligent reduction to practice. Regarding the type of proof required to corroborate inventor testimony on conception and reduction to practice, the Federal Circuit has stated:

> It is well established that when a party seeks to prove conception via the oral testimony of a putative inventor, the party must proffer evidence corroborating that testimony. . . . There is no particular formula that an inventor must follow in providing corroboration of his testimony of conception. Rather, whether a putative inventor's testimony has been sufficiently corroborated is determined by a 'rule of reason' analysis, in which 'an evaluation of all pertinent evidence must be made so that a sound determination of the credibility of the inventor's story may be reached.' However, that 'rule of reason' analysis does not alter the requirement of corroboration of an inventor's testimony. Evidence of the inventive facts must not rest alone on the testimony of the inventor himself.

Singh, 317 F.3d 1240–41 (internal citations omitted) (quoting *Price v. Symsek*, 988 F.2d 1187, 1195 (Fed. Cir. 1993)). With respect to priority and antedating a reference, the Federal Circuit has stated the following regarding burdens and required documentary support:

> When the issue of priority concerns the antedating of a reference, the applicant is required to demonstrate, *with sufficient documentation*, that the applicant was in possession of the later-claimed invention before the effective date of the reference.

> *Demonstration of such priority requires documentary support, from which factual findings and inferences are drawn, in application of the rules and law of conception, reduction to practice, and diligence.* The purpose is not to determine priority of invention—the province of the interference practice—but to ascertain whether the applicant was in possession of the claimed invention sufficiently to overcome the teachings and effect of an earlier publication of otherwise invalidating weight.

In re Steed, 802 F.3d 1311, 1316 (Fed. Cir. 2015) (emphases added); *see also Perfect Surgical Techniques, Inc. v. Olympus America, Inc.*, 841 F.3d 1004, 1008 (Fed. Cir. 2016) (citing *Steed*). "The principles are legal, but the conclusions of law focus on the evidence, for which the Board's factual findings are reviewed for support by substantial evidence." *Steed*, 802 F.3d at 1316; *see also NFC Tech., LLC v. Matal*, 871 F.3d 1367, 1371 (Fed. Cir. 2017).

Upon review of the parties' evidence and argument, we are faced with conception evidence that is not corroborated and fails to show full possession of the entire invention. See PO Resp. 15–16 (Ex. 2020 ¶¶ 3–4; Ex, 2031 ¶¶ 13–15). The evidence Patent Owner cites are general directions to consider irregular outer codes (Ex. 2021) and an unwitnessed inventor notebook entry (Ex. 2022). Patent Owner does not provide sufficient corroboration for these exhibits or sufficient explanation that these documents show possession of the invention. *In re Steed*, 802 F.3d at 1316. Indeed, Patent Owner's arguments do not point to any particular date of conception, but merely states that it was "before" March 20, 2000, based on these uncorroborated documents (Ex. 2021; Ex. 2022). PO Resp. 15–16. When pressed to establish a date, Patent Owner points only to early March dates, but does not point to a date by which possession was established.

Tr. 37:9–38:12 (discussing conception and reduction to practice dates). Based on the full record before us, Patent Owner has not provided sufficient and persuasive corroborated evidence of conception prior to March 20, 2000, based on the Exhibits 2020, 2021 and 2022.

Patent Owner's antedating argument further posits that in early March, March 10 and March 20, 2000, simulations refelecting the structure of Figure 3 of the '710 patent were produced. PO Resp. 15–16. (citing Ex. 2020 ¶¶ 8–15). To evaluate this arugment, Patent Owner relies on inventor testimony interpreting uncorroborated parameter and software files . PO Resp. 15–16. (citing Ex. 2020 ¶¶ 8–15); *see, e.g.*, Ex. 2023; Pet. Reply 20 n.5. In particular, Patent Owner's arguments rely on the testimony of Dr. Jin to establish the dates of creation of parameter files and simulation programs along with the dates these programs would have been run based on Dr. Jin's regular practices regarding changelogs for the program files. PO Resp. 15–17; Ex. 2020 ¶¶ 3–19.

We agree with Petitioner that on their face, the parameter files about which Mr. Jin testifies are undated. Pet. Reply 19 (Exhibits 2025, 2027, 2029 (undated parameter files)). Dr. Jin testifies to his typical practices of noting significant changes in the logs and relies on that practice and file metadata to establish the date the simulations were run and the invention was reduced to practice. PO Resp. 16 (asserting that March 20, 2000 was when the undated degree profiles written on March 13, 2000, were run in the simulation); Ex. 2020 ¶¶ 8, 15–18. Yet the undated files do not corroborate Dr. Jin's testimony on the relevant dates.

Under the rule of reason, we require corroborating evidence sufficient to support Dr. Jin's testimony that early March, either March 10 or March

20, 2000, was the reduction to practice date. PO Resp. 16; *see* Tr. 38:4–11. Yet the documents put forth by Patent Owner to allegedly support Dr. Jin's testimony are not probative evidence on their own; they too rely on Dr. Jin's testimony for interpretation. *See, e.g*. Ex. 2020 ¶¶ 3–19 (discussing Ex. 2023–2029). We also note that Patent Owner has not submitted the metadata Dr. Jin relies on to establish the dates in his testimony. *See* Ex. 2020 ¶¶ 15–18. And, even if we were to credit the existence of the metadata, we find that Dr. Jin's testimony establishes that his practices regarding changelog dating for programs did not always reflect whether the contents of the files were altered after the change date. Pet. Reply 20 n.5 (citing Ex. 1063). Absent other corroborating evidence, Dr. Jin's testimony about metadata and about his usual practices is not sufficient to establish the date on which the simulation was run as the reduction to practice date. PO Resp. 16.

Upon review of the parties' evidence and argument, Patent Owner's evidence is not sufficient to establish conception in early March 2000 or an actual reduction to practice date of March 20, 2000, by a preponderance of the evidence. Although we agree that the evidence shows activity in the form of an email (Ex. 2021) and an inventor notebook entry (Ex. 2022), both of these documents require interpretation by the inventor relative to the reduction to practice inquiry and Patent Owner has not provided persuasive evidence showing possession of the invention of the '710 patent. Weighing the evidence from the co-inventor Dr. Jin in its entirety, we are not persuaded that the evidence sufficiently shows reduction to practice of the invention by March 20, 2000. Dr. Jin's testimony as an inventor in this instance lacks sufficient corroborating evidence. Ex. 2020 ¶¶ 3–19. On the

full record, Patent Owner's evidence is not sufficient to establish conception in early March 2000 or that March 20, 2000 is the date of actual reduction to practice.

Thus, on the full record, Patent Owner fails to establish sufficient evidence that the invention was conceived and reduced to practice before Frey's March 20, 2000, publication date. PO Resp. 15; Ex. 2020 ¶¶ 3–19. Accordingly, we determine that Frey qualifies as a prior art prior art printed publication under 35 U.S.C. § 102(a).

C. Level of Ordinary Skill in the Art

Petitioner cites Dr. Davis's testimony that "[a] person of ordinary skill in the art is a person with a Ph.D. in mathematics, electrical or computer engineering, or computer science with emphasis in signal processing, communications, or coding, or a master's degree in the above area with at least three years of work experience in this field at the time of the alleged invention." Pet. 23 (citing Ex. 1006, ¶ 95). Patent Owner expresses no position on the level of ordinary skill in the art, but its declarant, Dr. Mitzenmacher, applies the same standard advanced by Petitioner. Ex. 2004 ¶ 58.

We determine that Petitioner's proposed definition comports with the qualifications a person would have needed to understand and implement the teachings of the '710 patent and the prior art of record. Accordingly, we apply Petitioner's definition of the level of ordinary skill in the art.

D. Anticipation by Frey of Claim 1 and 3

Petitioner contends that Frey anticipates the limitations of independent claim 1 and dependent claim 3 of the '710 patent. Pet. 34–42 (citing

Ex. 1006 ¶¶ 106–126). Patent Owner disputes Petitioner's contentions. PO Resp. 20–30; PO Sur-Reply 2–4.

1. Frey (Ex. 1002)

Frey describes adding irregularity to turbocodes with systematic bits that participate in varying numbers of parity check equations. Ex. 1002, 1 (Abstract). Frey discloses how a turbocode is made irregular, showing a graphical representation in the fifth image of Figure 1, provided below.

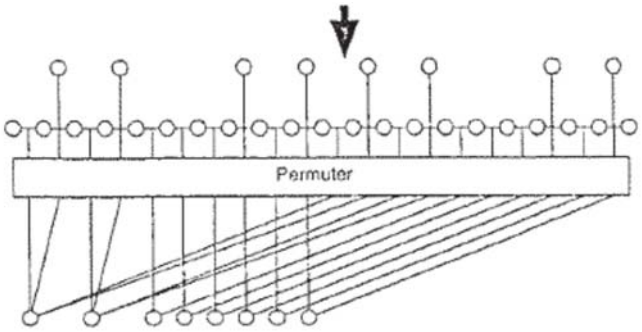

Figure 1, excerpted above, shows the systemic bits at the bottom with 2 or 4 lines going into the permuter. The fifth image of Figure 1 "shows how a turbocode can be made irregular by 'tying" some of the systematic bits together, i.e., by having some systematic bits replicated more than once." Ex. 1002, 3. Frey states that the fifth image of Figure 1 "illustrates one way the [] turbocode can be made irregular. Some of the systematic bits are 'tied' together, in effect causing some systematic bits to be replicated more than once." *Id.* at 2. Frey further discloses "that too [sic] keep the rate of the overall code fixed at 1/2, some extra parity bits must he punctured." *Id.*

In describing the decoding of irregular turbocodes, Frey provides a graphical model for the irregular turbocode shown in Figure 2, below.

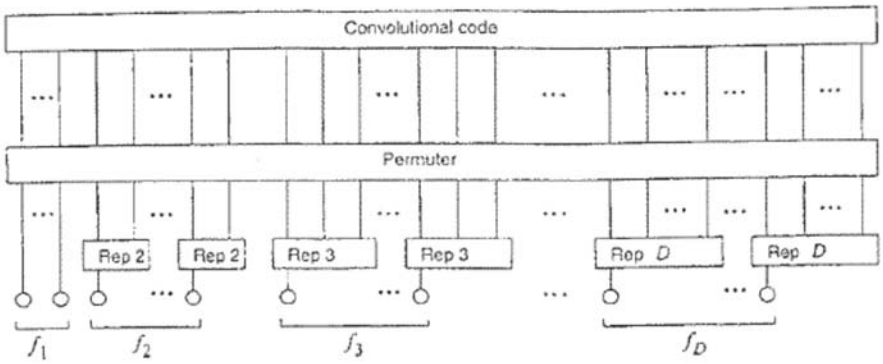

Figure 2: A general *irregular turbocode*. For $d = 1, \ldots, D$, fraction f_d of the codeword bits are repeated d times, permuted and connected to a convolutional code.

Figure 2 shows irregular turbocodes where f_d —the fraction of the codeword where each bit is repeated *d* times. Ex. 1002, 4. Frey discloses that "an irregular turbocode has the form shown [above] in Fig. 2, which is a type of 'trellis-constrained code'" where "f_d is the fraction of codeword bits that have degree *d* and *D* is the maximum degree." *Id*. at 2. Frey further discloses that "[e]ach codeword bit with degree *d* is repeated *d* times before being fed into the permuter. Several classes of permuter lead to linear-time encodable codes. In particular, if the bits in the convolutional code are partitioned into 'systematic bits' and 'parity bits', then by connecting each parity bit to a degree 1 codeword bit, we can encode in linear time." *Id*. at 2.

2. Analysis

To anticipate a patent claim under 35 U.S.C. § 102, "a reference must describe, either expressly or inherently, each and every claim limitation and enable one of skill in the art to practice an embodiment of the claimed invention without undue experimentation." *Am. Calcar, Inc. v. Am. Honda Motor Co.*, 651 F.3d 1318, 1341 (Fed. Cir. 2011) (citing *In re Gleave*, 560 F.3d 1331, 1334 (Fed. Cir. 2009)). When evaluating a prior art reference in the context of anticipation, the reference must be "considered together with

the knowledge of one of ordinary skill in the pertinent art." *In re Paulsen*, 30 F.3d 1475, 1480 (Fed. Cir. 1994) (citing *In re Samour*, 571 F.2d 559, 562 (CCPA 1978)). "[A] reference can anticipate a claim even if it 'd[oes] not expressly spell out' all the limitations arranged or combined as in the claim, if a person of skill in the art, reading the reference, would 'at once envisage' the claimed arrangement or combination." *Kennametal, Inc. v. Ingersoll Cutting Tool Co.*, 780 F.3d 1376, 1381 (Fed. Cir. 2015) (quoting *In re Petering,* 49 CCPA 993, 301 F.2d 676, 681 (1962)). We analyze the instant ground with these principles in mind.

Claim 1 requires a second encoder that has a "rate close to one" as recited in claim 1 or a "rate substantially close to one" as recited in claim 3. Petitioner relies on the express disclosure in Frey that the second encoder has a rate of 2/3. Pet. 38–42 (citing Ex. 1002, 5); Pet. Reply 5–6. In the Petition, Petitioner relies on the equation and description disclosed in Frey which states that "[f]or a rate 1/2 turbocode, each constituent convolutional code should be rate 2/3 (which may, for example, be obtained by puncturing a lower-rate convolutional code.)" Ex. 1002, 2; Pet. 40; Ex. 1006 ¶ 121. Applying the equation in Frey, Petitioner argues that the convolution coder (second coder) yields a rate of 0.74, which is "close to one" as required by the claim. Pet. 40–41.

Patent Owner argues that Frey does not apply the term "rate" as properly construed, which refers to the number of input bits divided by the number of output bits. PO Resp. 18; Ex. 1001, 2:44–47, 2:59–61. Patent Owner further argues that when the proper construction of rate is applied to Frey's second coder, the convolution coder, it does not have a rate close to one. PO Resp. 24–27. Petitioner's evidence and analysis, Patent Owner

argues, rests on an equation in Frey that Dr. Davis acknowledged is in error. Ex. 2033, 13:19–14:3. Indeed, Patent Owner asserts that Frey's rate is accurate only if an "unconventional" definition of rate is applied to the second coder. PO Resp. 27 n.6. To obtain the rate in Frey requires treating the non-systemic code of the second coder in Frey as a systemic code. *Id*.

In reply, Petitioner argues that Patent Owner ignores the express statements in Frey that the convolution coder has a rate of 2/3 and then ignores the evidence regarding the second coder that would yield the 2/3 rate that Frey identifies. We are not persuaded by Petitioner's arguments.

First, we note that Petitioner's arguments on reply abandon the arguments and evidence of the Petition. Pet. Reply 5–6. This is not surprising, as Petitioner's expert declarant, Dr. Davis, acknowledged the error in the equation in Frey that is applied in the Petition and offered a corrected equation and analysis in his deposition. Ex. 2033, 13:19–14:3. Thus, Petitioner's declarant admits the calculations in the Petition are not correct. Despite this reversal, Petitioner offers no persuasive argument or explanation that the rate in the '710 patent is disclosed by Dr. Davis's corrected Frey equation and calculations or even the statements and rate equations in Frey. Pet. Reply 5–6.

Attempting to rebut Patent Owner's analysis of the convolution coder in Frey, Petitioner nakedly asserts that a person of ordinary skill in the art would have understood that Frey's second encoder outputs both systemic and parity bits, because that is the only way to achieve the 2/3 rate described in Frey. *Id*. Petitioner fails to cite any evidence for this conclusory statement regarding what a skilled artisan would have understood. Indeed, Petitioner's argument is undermined by Frey and Dr. Davis's testimony,

which both indicate that the convolution code step in Frey yields parity bits and not systemic bits as Petitioner alleges. *Compare* Ex. 2033, 128:8–10, 131:1–5; Ex. 1002, Figure 1, *with* Pet. 5–6. We are not persuaded by Petitioner's revised argument and evidence supporting the rate of the second encoder in Frey.

Petitioner fails to explain how a person of skill in the art would have understood that the output of the convolution coder in Frey yields a 2/3 rate under the construction of rate described in the '710 patent and adopted above. Pet. Reply 5–6. Indeed, Petitioner has not shown persuasively and by a preponderance of the evidence that the rate of the convolution coder in Frey yields a rate close to one under the construction of rate applicable to the '710 patent. Based on the full record, Petitioner has not shown by a preponderance of the evidence that Frey discloses that the second encoder has a rate close to one as required in claims 1 and 3.

Thus, on this record, we find that Petitioner has not shown has not presented sufficient information that Frey discloses the second encoder rate limitations of claims 1 and 3.

E. Obviousness based on Frey and Divsalar: Claims 1–8 and 11–14

Petitioner contends that claims 1–8 and 11–14 would have been obvious over the combination of Divsalar and Frey. Pet. 42–60 (citing Ex. 1006 ¶¶ 127–183). Patent Owner disputes Petitioner's contentions. PO Resp. 30–50.

1. Divsalar

Divsalar discloses "turbo-like" coding systems that are built from fixed convolutional codes interconnected with random interleavers,

including both parallel concatenated convolutional codes and serial concatenated convolutional codes as special cases. Ex. 1003, 1. With fixed component codes and interconnection topology, Divsalar demonstrates that as the block length approaches infinity, the ensemble (over all possible interleavers) maximum likelihood error probability approaches zero, if the ratio of energy per bit to noise power spectral density exceeds some threshold. *Id*.

The general class of concatenated coding systems is depicted in Figure 1 of Divsalar as follows:

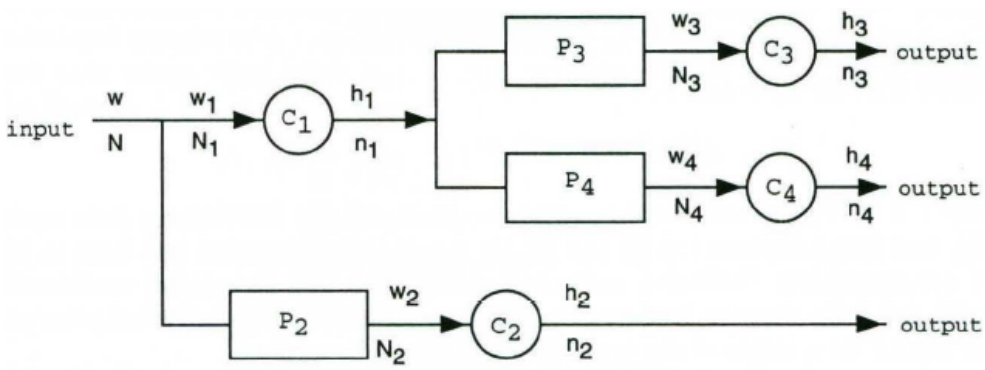

Figure 1. A "turbo-like" code with $s_I = \{1,2\}$, $s_O = \{2,3,4\}$, $\bar{s}_O = \{1\}$.

Figure 1 illustrates that encoders C_2, C_3, and C_4 are preceded by interleavers (permuters) P_2, P_3, and P_4, except C_1, which is connected to an input rather than an interleaver. *Id*. at 2–3. The overall structure must have no loops and, therefore, is called a "turbo-like" code. *Id*.

Divsalar further discloses that "turbo-like" codes are repeat and accumulate (RA) codes. *Id*. at 5. The general scheme is depicted in Figure 3 as follows:

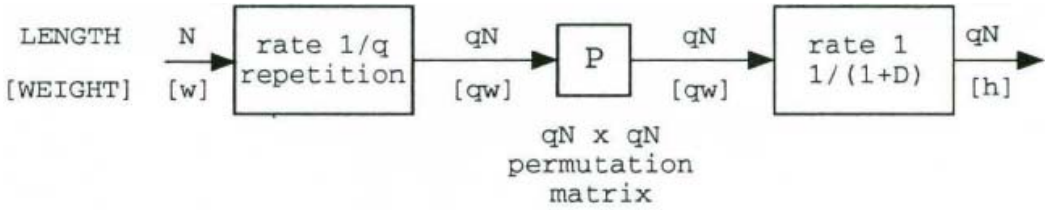

Figure 3. Encoder for a (qN, N) repeat and accumulate code. The numbers above the input-output lines indicate the length of the corresponding block, and those below the lines indicate the weight of the block.

Figure 3 illustrates that information block of length N is repeated q times, scrambled by interleaver of size qN, and then encoded by a rate 1 accumulator. *Id*. The accumulator can be viewed as a truncated rate-1 recursive convolutional encoder. *Id*. Figure 3 further illustrates a simple class of rate 1/q serially concatenated codes where the outer code is a q-fold repetition code and the inner code is a rate 1 convolutional code with a transfer function 1/(1+ D). *Id*. at 1, 5.

2. Analysis

A claim is unpatentable under 35 U.S.C. § 103(a) if the differences between the claimed subject matter and the prior art are such that the subject matter, as a whole, would have been obvious at the time the invention was made to a person having ordinary skill in the art to which said subject matter pertains. *See KSR Int'l Co. v. Teleflex Inc*., 550 U.S. 398, 406 (2007). The question of obviousness is resolved on the basis of underlying factual determinations, including (1) the scope and content of the prior art; (2) any differences between the claimed subject matter and the prior art; (3) the level of skill in the art; and (4) where in evidence, so-called secondary considerations. *See Graham v. John Deere Co.*, 383 U.S. 1, 17–18 (1966). We also recognize that prior art references must be "considered together

with the knowledge of one of ordinary skill in the pertinent art." *In re Paulsen*, 30 F.3d at 1480 (citing *In re Samour*, 571 F.2d 559, 562 (CCPA 1978)). We analyze Petitioner's obviousness grounds with the principles identified above in mind.

Petitioner contends that claims 1–8 and 11–14 would have been obvious over the combination of Divsalar and Frey. Pet. 42–60 (citing Ex. 1006 ¶¶ 127–183). With respect to the reasons to combine the references, Petitioner contends that Frey and Divsalar are directed to the same field of error-correcting codes (variations on turbocodes). *Id.* at 42–43 (citing Ex. 1006 ¶ 128). Petitioner argues that a person of ordinary skill in the art would have been motivated by Frey's teaching of better performance over classical turbo codes to apply irregularity to Divsalar's repeat accumulate codes. *Id.* at 43 (citing Ex. 1006 ¶ 129). Petitioner further asserts that a person of ordinary skill in the art would have understood that the components used in Frey and Divsalar could be substituted, requiring a trivial modification to the implementation of the Divsalar encoder to combine the references. *Id.* at 43–45 (citing Ex. 1006 ¶¶ 130–131). Petitioner also relies on a thesis by the co-inventor of the '710 patent (Pet. 45–47 (citing Ex. 1006 ¶ 132)) and an email from Dr. Frey to Dariush Divsalar (Pet. 44–45 (citing Ex. 1017, 52) in support of the combination of Divsalar and Frey.

Patent Owner argues that Petitioner's motivations to combine Divsalar and Frey are insufficient because (1) Frey teaches introducing irregularity leads to worse results; (2) Frey and Divsalar are not similar codes; (3) the proposed modifications to Frey are not trivial or simple changes; (4) Petitioner did not advance a sufficient obvious to try argument; and (5)

Petitioner did not show a reasonable expectation of success. PO Resp. 32–50. For the reasons discussed below, we agree with Patent Owner.

With respect to modification of Divsalar and Frey, the petition states that "[i]ncorporating the irregular repetition of Frey into the RA codes of Divsalar would have required only a trivial change." Pet. 44. Petitioner describes it as a "trivial modification for a person of ordinary skill to make to an existing RA coder." Pet. 45 (citing Ex. 1006 ¶ 131).

In response, Patent Owner argues that Frey acknowledges that finding a good profile for irregularity is not trivial. Ex. 1002, 5; PO Resp. 32. We agree. Indeed, Patent Owner argues that Frey's profiles only yielded one functional result that would not have been trivial to incorporate into Divsalar. PO Resp. 41. Furthermore, Petitioner fails to explain how an ordinarily skilled artisan would have incorporated Frey's irregular repetition into Dvisalar, beyond generic statements of adding irregularity. Pet. 45.

With respect to modification, we are not persuaded by Petitioner's citation to the thesis of a co-inventor of the '710 patent, Aamod Khandekar, to support the ease of modifying Divsalar with Frey. Pet. 45–47 (citing Ex. 1006 ¶ 132.). The Khandekar thesis is not prior art to the '710 patent because it was submitted in June 2002, more than two years after the '710 patent's priority date. Prelim. Resp 29–30. In addition, Petitioner provides no arguments or evidence that explain how the thesis supports its contention that a person of ordinary skill in the art would have modified or combined Frey and Divsalar at the time of the '710 patent. We do not find the thesis of a co-inventor of the '710 patent, which appears to postdate the '710 patent's priority date, to be timely corroborating evidence of the ease with which a person of ordinary skill in the art would have combined Frey

and Divsalar at the time of patenting. Accordingly, we give Petitioner's argument and evidence based on the Khandekar thesis no weight with respect to the motivation to combine or expectation of success in combining Divsalar and Frey.

Petitioner's vague and unsupported statements regarding the combination of references and their proposed modifications fail to establish or even address whether such modifications produce a reasonable expectation of success. PO Resp. 42. In contrast, Patent Owner presents evidence and argument that Frey teaches that finding an irregular degree profile is difficult and that such codes often lead to non-functioning results. *Id*. (citing Ex. 1002, 5–6; Ex. 2004 ¶ 102).

We are persuaded by Patent Owner's arguments that Petitioner failed to establish a reasonable expectation of success for the proposed modifications to Frey and Divsalar. Petitioner's argument in response acknowledges the missing expectation of success evidence by relying on the experimental nature of the field. Pet. Reply 9. Petitioner states that

> [a]s [Patent Owner] concedes, *rigorous mathematical analysis of codes is difficult, and, as a result, POSAs routinely developed codes by experimentation*. POR, 4. Encouraged by Frey's results, POSAs would have been motivated to use Frey's irregularity in Divsalar. Indeed, this is exactly what Dr. Frey suggested to Dr. Divsalar in an email dated December 8, 1999. Ex. 1035, App. A; Ex. 1064, 185:5–8. The Petition showed that POSAs would have had a reasonable expectation of success because it was trivial to modify Divsalar to make it irregular by repeating some of the information bits more than others, which meets the limitations of the claimed invention. Pet., 44–47. . . . Dr. Mitzenmacher agreed that simply repeating the first two bits in Divsalar "q+10" times and the rest "q" times would make the code irregular. Ex. 1062, 153:11-154:8.

Pet. Reply 9 (emphasis added). To buttress the argument that a skilled artisan would have had a reasonable expectation of success in the proposed modifications, Petitioner introduces new testimony and simulations from a new declarant, Dr. Frey, to confirm that using Frey's irregularity in Divsalar would not have been difficult and would have yielded a reasonable expectation of success. *Id*. at 10 (citing Ex. 1068).

Yet, even if we were to deem the testimony and simulation to be within the proper scope of a reply brief,[6] they do not support a reasonable expectation of success *at the time of the invention*. We agree with Patent Owner that "[i]t is completely irrelevant what Dr. Frey claims he could do in the year 2018 when armed with Caltech's patent disclosures and publications, [the inventor's] original coding work, contemporary resources, and some 18 years of post-filing date knowledge." PO Sur-Reply 6. Because this evidence is not tied to the state of the art at the time of the invention, it is not probative of anticipated success. *See Millennium Pharm., Inc. v. Sandoz Inc.*, 862 F.3d 1356, 1367 (Fed. Cir. 2017) (quoting *Interconnect Planning Corp. v. Feil*, 774 F.2d 1132, 1138 (Fed. Cir. 1985)) ("Those charged with determining compliance with 35 U.S.C. § 103 are required to place themselves in the minds of those of ordinary skill in the relevant art *at the time the invention was made*, to determine whether that which is now plainly at hand would have been obvious at such earlier time." (emphasis added)).

---

[6] We need not reach this issue, because we do not rely on this evidence in a manner adverse to Patent Owner. *See infra* § III.A. (dismissing Patent Owner's Motion to Exclude as moot on the same basis).

As part of our obviousness analysis, we consider "the scope and content of the prior art." *See Graham*, 383 U.S. at 17–18. In this regard, we credit Patent Owner's testimony and evidence that an important aspect of the art in this case is the relative unpredictability of developing error-correction codes. *See* PO Resp. 4–5 (citing Ex. 2004 ¶¶ 37–60; Ex. 2033, 256:21–257:12) ("The field of error correction coding has historically been characterized by significant experimentation and unpredictable results. . . . Even when well-performing codes are identified, the reasons for the improved performance are often not understood.").

Petitioner embraces the unpredictability in the art and advancement through experimentation (Pet. Reply 9), arguing that Dr. Frey suggested the combination of Frey with Divsalar's encoder to Dr. Divsalar in an email dated December 8, 1999.[7] Ex. 1035; App. A; Ex. 1064, 185:5–8. We do not agree with Petitioner that the need to run experiments in an unpredictable field, such as error-correction coding, indicates anything about whether such experiments ultimately would have been successful at the time of the invention. Importantly, "[u]npredictability of results equates more with nonobviousness rather than obviousness, whereas that which is predictable is more likely to be obvious." *Honeywell Int'l Inc. v. Mexichem Amanco*

[7] Petitioner's reliance on the purported email between Frey and Divsalar, as evidenced by an expert report from Frey in a related district court litigation (Ex. 1017) is not adequately supported by persuasive and corroborating evidence sufficient to assess the content of these purported communications. Petitioner fails to provide an exhibit with sworn testimony in support of this alleged Frey to Divsalar email. Accordingly, we give Petitioner's arguments and evidence regarding the Frey email no weight with respect to the expectation of success in combining Divsalar and Frey.

Holding S.A., 865 F.3d 1348, 1356 (Fed. Cir. 2017). In the absence of any evidence rooted in the Petition that substantiates a reasonable expectation of success, Petitioner's reliance on a known need for experimentation is not sufficient to support its obviousness rationale.[8] *See Arctic Cat Inc. v. Bombardier Recreational Prod. Inc.*, 876 F.3d 1350, 1360–61 (Fed. Cir. 2017) ("[W]here a party argues a skilled artisan would have been motivated to combine references, it must show the artisan would have had a reasonable expectation of success from doing so." (internal quotation omitted)).

For these reasons, we are not persuaded that an ordinarily skilled artisan would have been motivated to combine the teachings of Frey and Divsalar in the manner suggested by Petitioner. Thus, we determine Petitioner has not shown by a preponderance of the evidence that claims 1–8 and 11–14 would have been obvious over the combination of Frey and Divsalar.

---

[8] Despite a bare statement that a skilled artisan would have found it obvious to try improving codes by adding irregularity (Pet. 48), Petitioner does not contend that its proposed combination should be analyzed under obvious-to-try case law. *Cf.* Tr., 14:1–6 (Petitioner acknowledging that it was not putting forth an obvious-to-try argument). Nor could Petitioner, because Petitioner does not develop an obvious-to-try theory. Specifically, Petitioner does not establish that the prior art directs which parameters to try and/or guides an inventor toward a particular solution. *See Bayer Schering Pharma AG v. Barr Labs., Inc.*, 575 F.3d 1341, 1347 (Fed. Cir. 2009).

F. Obviousness based on Frey, Divsalar, and Luby97: Claims 15—17, 19–22, and 24–33

Petitioner contends that claims 15–17, 19–22, and 24–33 would have been obvious over the combination of Divsalar, Frey, and Luby97. Pet. 61–72 (citing Ex. 1006 ¶¶ 188–250). Patent Owner disputes Petitioner's contentions. PO Resp. 50–52.

1. Luby97 (Ex. 1011)

Luby97 describes "randomized constructions of linear-time encodable and decodable codes that can transmit over lossy channels at rates extremely close to capacity." Ex. 1011, 150 (Abstract). Luby97 describes receiving data to be encoded in a stream of data symbols, such as bits, where the "*stream of data symbols* [] is partitioned and transmitted in logical units of blocks." *Id*. (emphasis added).

2. Analysis

Because Petitioner's obviousness analysis for claims 15–17, 19–22, and 24–33 rely on the same rationale for combining Frey and Divsalar discussed above, Petitioner's rationale for this ground also incorporates the same deficiencies. Thus for the reasons discussed above, we determine Petitioner has not shown by a preponderance of the evidence that claims 15–17, 19–22, and 24–33 would have been obvious over the combination of Divsalar, Frey, and Luby97.

Accordingly, upon review of full record, we are not persuaded that an ordinarily skilled artisan would have been motivated to combine the teachings of Frey and Divsalar with Luby97 in the manner suggested by Petitioner. Thus, we determine Petitioner has not shown by a preponderance

of the evidence that claims 15–17, 19–22, and 24–33 would have been obvious in view of Divsalar, Frey, and, Luby97.

III. MOTIONS

A. Patent Owner's Motion to Exclude

Patent Owner moves to exclude Exhibits 1013, 1029-1049, 1053, 1055, 1057–1061, 1065, 1067, 1068 and portions of Exhibits 1062 and 1064. Paper 57, 1. Patent Owner's motion is dismissed as moot with respect to these exhibits, as we do not rely on them in a manner adverse to Patent Owner.

B. Patent Owner's Motion for Sanctions

Patent Owner requests sanctions against Petitioner for allegedly failing to stay within the proper scope of cross-examination during the deposition of Dr. Mitzenmacher. Paper 50, 1. Specifically, Patent Owner details questioning of Dr. Mitzenmacher that allegedly "ventured into various topics beyond the scope of the witness' direct testimony." *Id.* at 7–9. For example, Patent Owner cites "extensive questioning regarding Tanner graphs and figures newly created by Petitioner's lawyers, but absent from any petition materials or the witness' direct testimony." *Id.* at 8. As sanctions, Patent Owner asks us to: (1) strike the out-of-scope testimony elicited by Petitioner; (2) hold the direct testimony of Dr. Mitzenmacher to be facts established in this proceeding; and (3) impose "reasonable compensatory expenses, including attorney fees, for costs reasonably related to excessive questioning and deposition time." *Id.* at 9–10.

Petitioner contends that "each question posed by Petitioner during Dr. Mitzenmacher's deposition pertained directly to topics and opinions in

his declaration." Paper 52, 5. Regarding the Tanner graphs and figures, Petitioner contends these were properly served upon Petitioner at Dr. Mitzenmacher's deposition in accordance with 37 C.F.R. § 42.53(f)(3). *Id.* at 6. According to Petitioner, Patent Owner's proposed sanctions are unwarranted, particularly because Patent Owner suffered no harm. *Id.* at 7–8.

The "Board may impose a sanction against a party for misconduct." 37 C.F.R. § 42.12(a); *see also* 35 U.S.C. § 316(a)(6) (requiring regulations prescribing sanctions). As the moving party, Patent Owner has the burden to persuade the Board that sanctions are warranted. *See* 37 C.F.R. § 42.20(c). In general, a motion for sanctions should address three factors: (i) whether a party has performed conduct that warrants sanctions; (ii) whether the moving party has suffered harm from that conduct; and (iii) whether the sanctions requested are proportionate to the harm suffered by the moving party. *See Square, Inc. v. Think Comput. Corp.*, Case CBM2014-00159, slip op. at 2 (PTAB Nov. 27, 2015) (Paper 48) (citing *Ecclesiastes 9:10-11-12, Inc. v. LMC Holding Co.*, 497 F.3d 1135, 1143 (10th Cir. 2007)).

Having reviewed the relevant portions of Dr. Mitzenmacher's deposition, we agree with Petitioner that sanctions are not warranted. Petitioner's attempts to elicit testimony regarding the Tanner graphs and figures, while inartful, did not rise to the level of sanctionable conduct because they were reasonably related to Dr. Mitzenmacher's direct testimony. Furthermore, we agree with Petitioner that Patent Owner suffered no harm, particularly in light of our Decision. For these reasons, we deny Patent Owner's motion for sanctions.

IV. CONCLUSION

For the foregoing reasons, Petitioner has not shown by a preponderance of the evidence that claims 1 and 3 of the ’710 patent are anticipated by Frey pursuant to 35 U.S.C. § 102(b); claims 1–8 and 11–14 of the ’710 patent would have been obvious over Divsalar and Frey; and claims 15–17, 19–22, and 24–33 of the ’710 patent would have been obvious over Divsalar, Frey, and Luby97.

V. ORDER

Accordingly, it is:

ORDERED that claims 1–8, 11–17, 19–22, and 24–33 of the ’710 patent are not held to be unpatentable;

FURTHER ORDERED that Patent Owner’s Motion to Exclude is *dismissed as moot*;

FURTHER ORDERED that Patent Owner’s Motion for Sanctions is *denied*; and

FURTHER ORDERED that, because this is a Final Written Decision, parties to this proceeding seeking judicial review of our decision must comply with the notice and service requirements of 37 C.F.R. § 90.2.

For PETITIONER:

Richard Goldenberg
Dominic E. Massa
Michael Smith
James M. Dowd
Mark D. Selwyn
Kelvin Chan
WILMER CUTLER PICKERING HALE AND DORR LLP
richard.goldenberg@wilmerhale.com
dominic.massa@wilmerhale.com
michaelh.smith@wilmerhale.com
james.dowd@wilmerhale.com
mark.selwyn@wilmerhale.com
kelvin.chan@wilmerhale.com

For PATENT OWNER:

Michael T. Rosato
Matthew A. Argenti
Richard Torczon
WILSON SONSINI GOODRICH & ROSATI
mrosato@wsgr.com
margenti@wsgr.com
rtorczon@wsgr.com

Todd M. Briggs
Kevin P.B. Johnson
QUINN EMANUEL URQUHART & SULLIVAN LLP
toddbriggs@quinnemanuel.com
kevinjohnson@quinnemanuel.com